KH INDUSTRIES

LIGHTING & POWER

RTB Heavy Duty Industrial Cord Reels

RTBA3L-WDD515-J14K

RTBB3LW-WW-J12F

APPLICATIONS

- Construction
- Maintenance/Service
- Manufacturing
- Vehicle Charging Stations
- Retail
- Education/Hospitality
- Utilities
- Medical/Laboratories

FEATURES

- 30 Amp/600 Volt rated slip ring
- Heavy duty formed steel mounting base for ceiling, floor, or wall
- Adjustable ball stop included
- Adjustable 4 roller guide arm included; 12 possible positions
- Adjustable ratchet can be engaged (positive lock) or disengaged (constant tension) as needed
- 6' feed cord included

OPTIONS

- Up to 20 Amps
- 2 - 4 Conductors
- 12 - 16 AWG
- SJOW, SOOW, SEOW (black or white cord)
- Custom cord lengths available
- Outlet boxes, plugs, connectors, or work lights
- Pivot Base rotates up to 345°
- Swivel Base 360° continuous rotation

KH INDUSTRIES

The Permanent Name in Temporary Lighting & Power

US MANUFACTURER

NEMA 2 Commercial and Industrial Grade for Indoor Use

KH Industries offers the following selection of retractable power cord reels that will meet most lift/drag applications and environmental needs.

RTBB3LB-1DB515-J12F

RTB Plug-n-Play Series, NEMA 2 Rated for Indoor Use, 125 VAC								
Model No.	**Description/ Features**	**Cord Lgth**	**Gauge/ Conductor**	**Cord Type/ Color**	**Max Amps**	**NEMA Con-nector**	**NEMA Plug Config.**	**Reel Color**
RTBA3L-WDD515-J16F	(2) 15A Duplex	25’	16/3	SJOW/Black	10	(4) 5-15R	5-15P	Yellow
RTBA3L-WDD515-J16K		50’						
RTBB3L-WDD515-J14F		25'	14/3		15			
RTBA3L-WDD515-J14K		50’						
RTBB3L-4DD515-B12G		30'	12/3	SOOW/Black				
RTBB3L-4DD520-B12G	(2) 20A Duplex	30'			20	(4) 5-20R	5-20P	
RTBB3L-WGB520-J12F	(1) 20A Duplex/ Blank, GFCI in Feed Cord	25’		SJOW/Black		(2) 5-20R		
RTBB3L-WGB520-J12K		50’						
RTBB3L-4GB520-J12F	(1) 20A Duplex GFCI/Blank	25’						
RTBB3L-4GB520-J12K		50’						
RTBB3L-WDD520-J12F	(2) 20A Duplex	25’				(4) 5-20R		
RTBB3L-WDD520-J12K		50’						

RTB Plug-n-Play Series, NEMA 2 for Indoor Use, 125 VAC								
Model No.	**Description/ Features**	**Cord Lgth**	**Gauge/ Conductor**	**Cord Type/ Color**	**Max Amps**	**NEMA Con-nector**	**NEMA Plug Config.**	**Reel Color**
RTBB3LW-1DD520-H12F	(2) 20A Duplex	25'	12/3	SEOW/White	20	(4) 5-20R	5-20P	White
RTBB3LW-1DD520-J12F		25'		SJOW/Black				
RTBB3LW-1DD520-J12K		50'						
RTBB3LW-1DD520-P12F		25'		SJOW/White				
RTBB3LW-1DD520-P12K		50'						
RTBB3LB-1DD520-J12F		25'		SJOW/Black				Black
RTBB3LB-1DD520-J12K		50'						
RTBB3LB-1GB520-J12F	(1) 20A GFCI/ Blank	25'				(2) 5-20R		
RTBB3LB-1GB520-J12K	(1) 20A GFCI/ Blank	50'						

NEMA 4 Commercial and Industrial Grade for Indoor or Outdoor Use

The tables on these pages are a limited sample of the many cord reels KH Industries has available. For additional configurations or custom needs, please visit our website or call us today.

RTBB3L-WW-J12F

RTB Cord Reel Series, NEMA 4 for Outdoor (Wet Location) or Indoor Use, 600 VAC								
Model No.	**Description/ Features**	**Cord Lgth**	**Gauge/ Conductor**	**Cord Type/ Color**	**Max Amps**	**NEMA Connector**	**NEMA Plug Config.**	**Reel Color**
RTBA3L-WW-B16F	Blunt Ends	25’	16/3	SOOW/Black	10	N/A	N/A	Yellow
RTBA3L-WW-B16K		50’						
RTBB3L-WW-B14F		25’	14/3		15			
RTBB3L-WW-B14I		40’						
RTBB4L-WW-B14G		30’	14/4					
RTBB3L-WW-B12G		30’	12/3		20			
RTBB4L-WW-B12F		25’	12/4		16			

RTB Series, NEMA 4 for Outdoor (Wet Location) or Indoor Use, 300 VAC								
Model No.	**Description/ Features**	**Cord Lgth**	**Gauge/ Conductor**	**Cord Type/ Color**	**Max Amps**	**NEMA Connector**	**NEMA Plug Config.**	**Reel Color**
RTBB3LW-WW-J12F	Blunt Ends	25’	12/3	SJOW/Black	20	N/A	N/A	White
RTBB3LW-WW-J12K		50’						
RTBB3LW-WW-P12F		25’		SJOW/White				
RTBB3LW-WW-P12K		50’						
RTBB3LB-WW-J12F		25’		SJOW/Black				Black
RTBB3LB-WW-J12K		50’						

Model No.	Pivot/Swivel Bases
RTBF-PVB	Pivot Base, 345°
RTBF-SWB3	Swivel Base, 360° continuous rotation; 3 conductor
RTBF-SWB4	Swivel Base, 360° continuous rotation; 4 conductor

Additional cord reels are available, including motorized, retrieve cord reels, and cord reels for specialty applications. Please contact KH Industries for more information.

The Permanent Name in Temporary Lighting & Power

RTB Heavy Duty Industrial Cord Reel Accessories

360° Continuous Swivel Base

345° Pivot Base

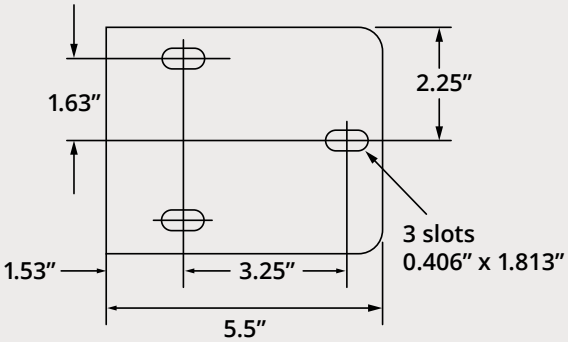

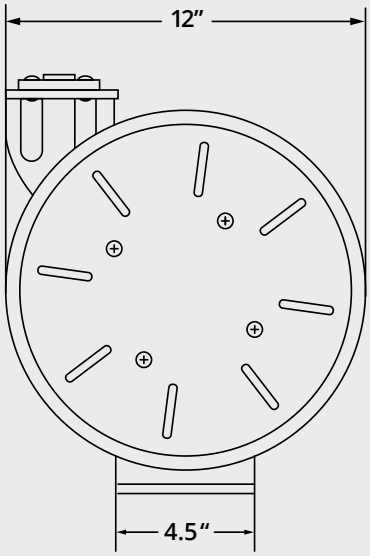

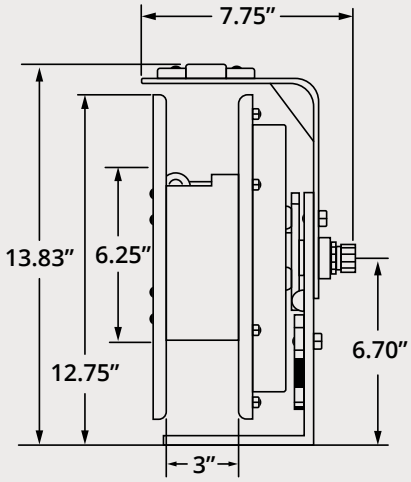

ACCESSORIES

- Pre-wired options include outlet boxes, plugs, or connectors
- Optional Pivot Base rotates up to 345°
- Optional Swivel Base 360° continuous rotation

RTB Series Cord Reels are de-rated to the NEMA rating of the accessories when added

SPECIFICATIONS

Ask your KH Industries temporary power specialist for a dimensional drawing for complete measurements.

- Height: 13.83 in.
- Width: 7.75 in.
- Depth: 12 in.
- Weight: varies based on cord type and length

The Permanent Name in Temporary Lighting & Power